3rd ANG PROJECTION

ALL DIMS IN MM UNLESS STATED

REV	DESCRIPTION	DATE	APPROVED
1	INITIAL ISSUE	010394	DNL
2	MAL. SPEC. CHANGE	19/12/01	CN10
3	DRAWING NO. CHANGE FROM ASS. TO 001	3/04/02	CN23
4	DRAWING NO. CHANGE FROM 001 TO ASS	17/05/02	CN32

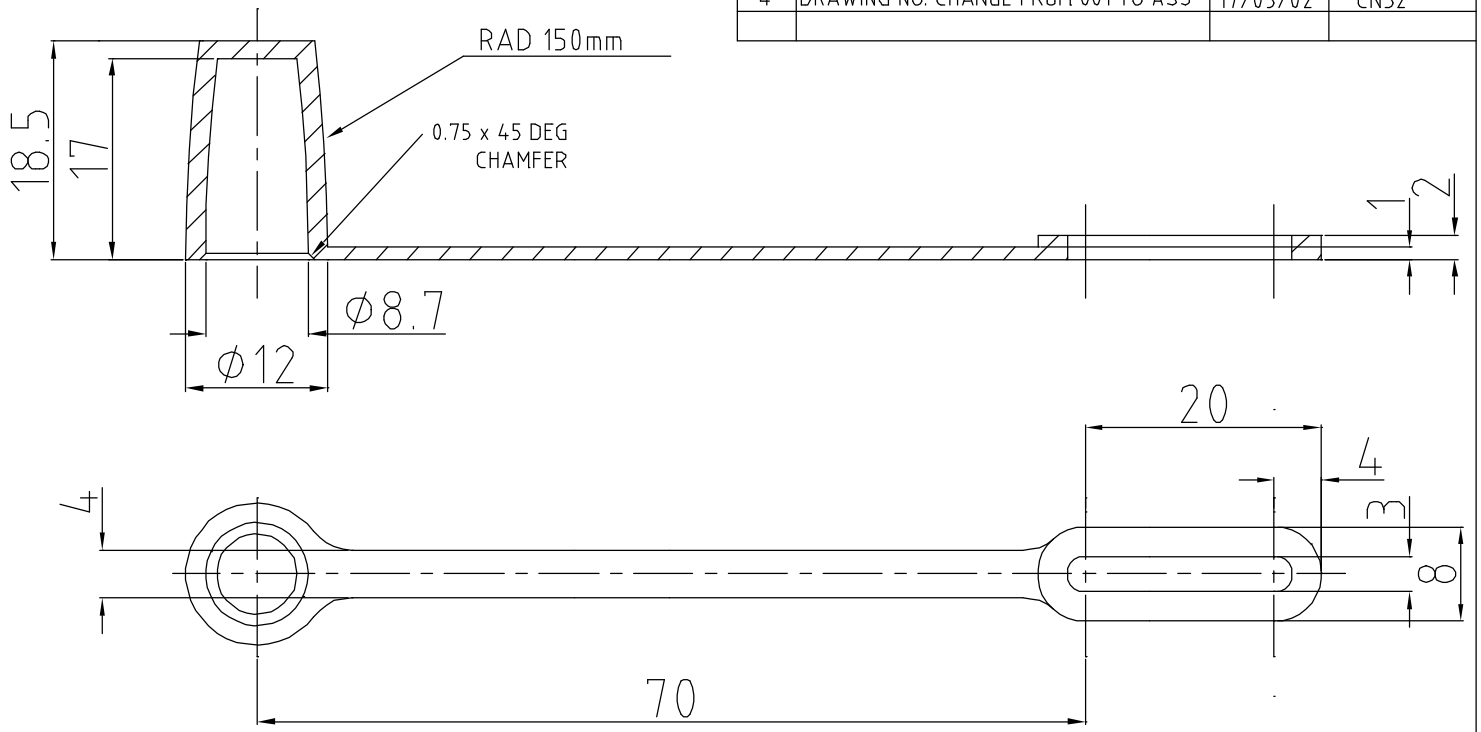

EUROPLUS FIBRE OPTICS
Thompson Drive, AIA, Rendlesham, Woodbridge, Suffolk IP12 2TW
Tel: (01394) 445100 Fax: (01394) 445109

NOTES:

GEN TOLS
0 =+/-0.5
0.0 = +/-0.3
0.00 = +/-0.1

DESCRIPTION
ONE PIECE FC/ST CONNECTOR DUST CAP

MATERIAL	BLACK PVC C51/40	DRAWN CDD	DATE 150796	SIZE	FILE NAME 0211ass	DWG. No EFA02 11 ASS	REV. 4
FINISH	COLOUR AS REQ'D	CHKD DJD	DATE 150796				
ICE No:		DO NOT SCALE DRAWING		SCALE 2:1		SHEET 1 of 1	

THIS DOCUMENT CONTAINS PROPRIETRY INFORMATION WHICH SHALL NOT BE REPRODUCED, TRANSFERED TO OTHER DOCUMENTS, DISCLOSED TO OTHERS USED FOR MANUFACTURING OR ANY OTHER PURPOSE WITHOUT THE WRITTEN AUTHORISATION OF EUROPLUS FIBRE OPTICS Ltd.